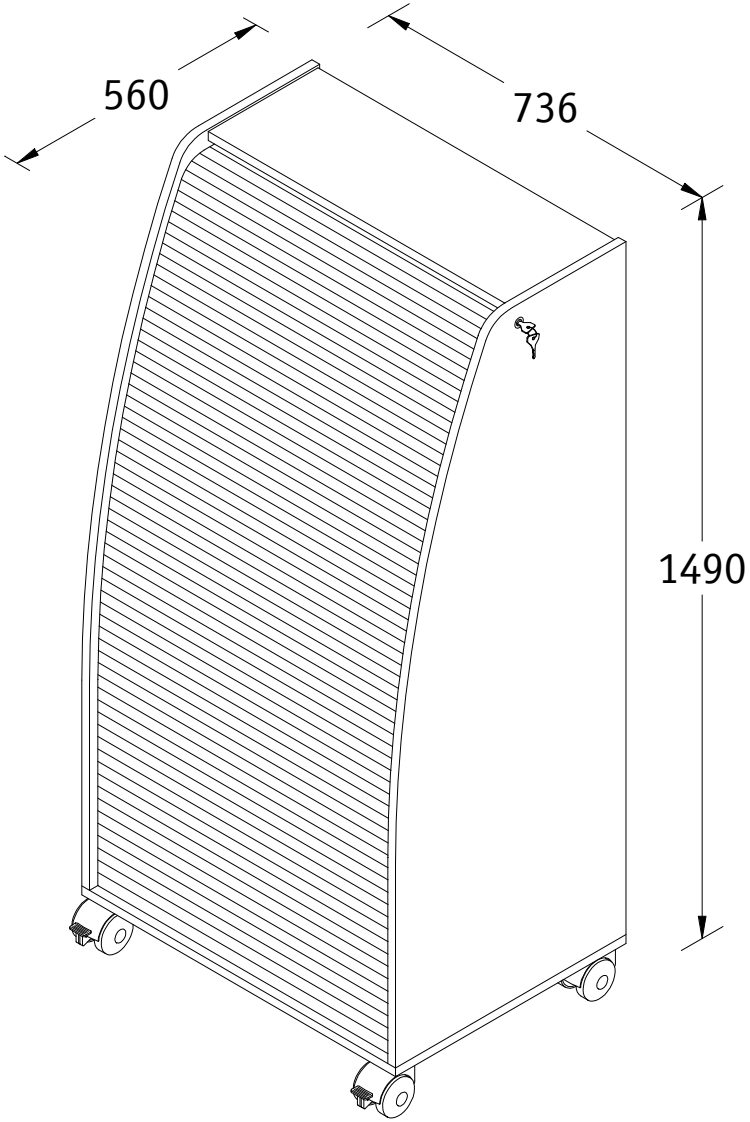

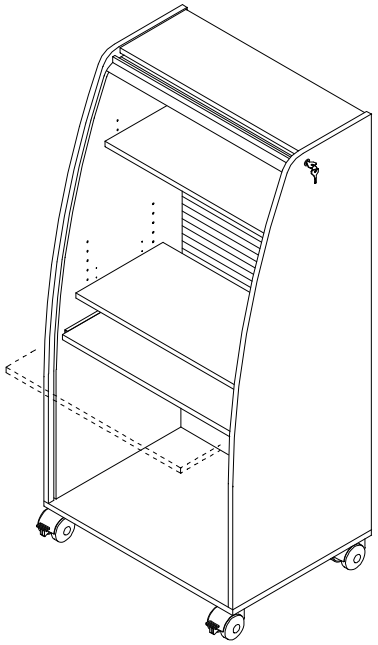

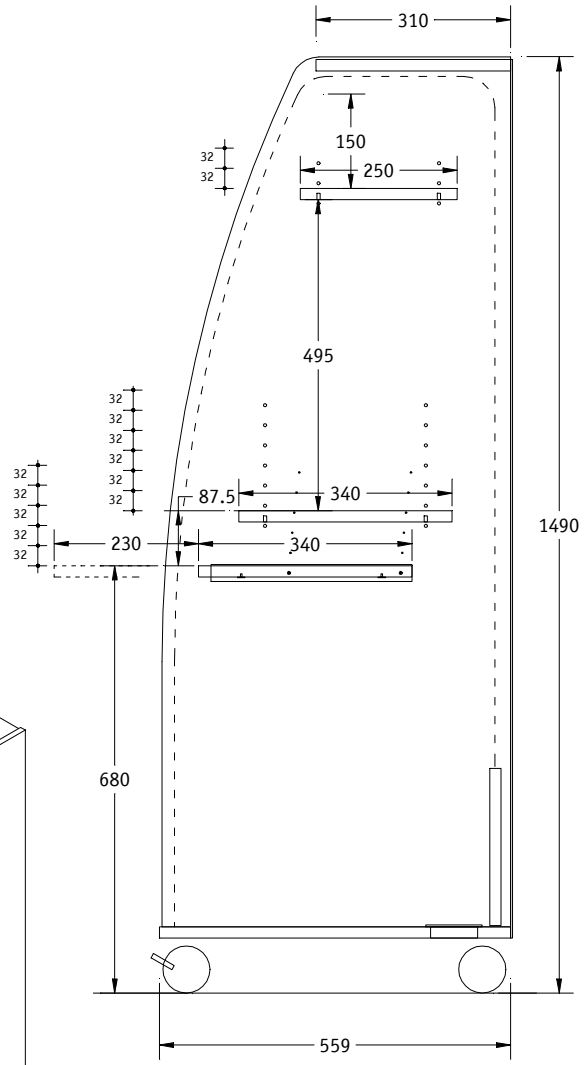

Dataflex®

OFFICE FURNITURE AND ERGONOMICS

DATA-INFO # 80.900-902

Dataflex® is a registered trademark of DATAFLEX INTERNATIONAL BV P.O. Box 713 NL-2920 CA Krimpen a/d IJssel

All dimensions in mm - Dimensions en mm - Abmessungen in mm - Alle afmetingen in mm